DEW POINT

WASH BASIN

Vitreous China wall-hung wash basin with half pedestal. Overflow hole and single tap hole in the centre.

Features

- Vitreous China Washbasin
- Contemporary design
- Single tap hole in the centre
- Deep bowl for comfortable use

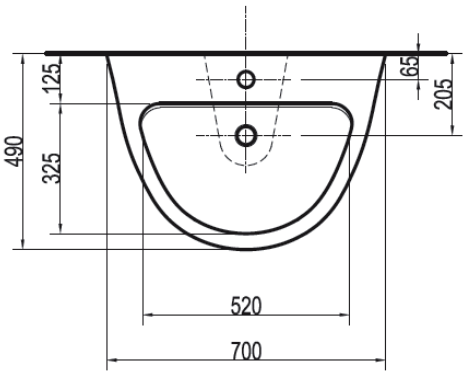

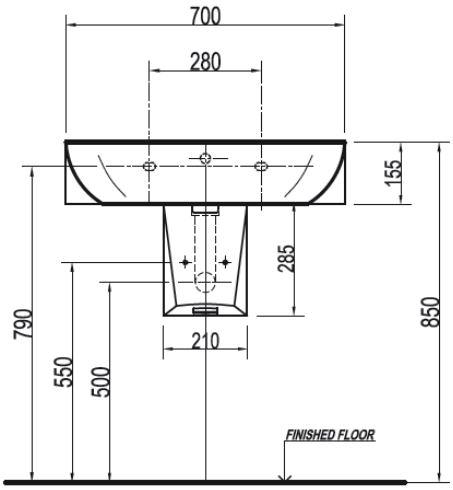

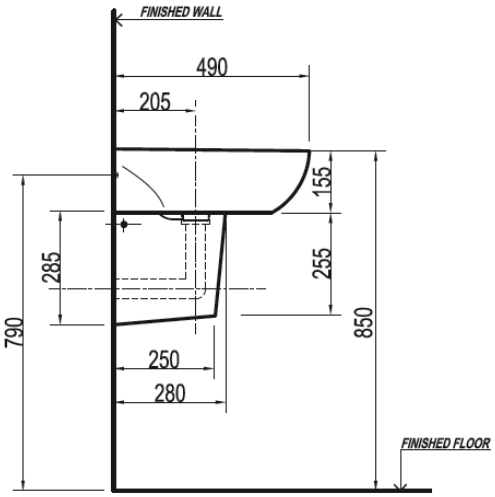

Johnson TILES

421 Dorset Rd BAYSWATER
OPEN 7 DAYS
PHONE: 1800 354 759
www.JohnsonTiles.com.au